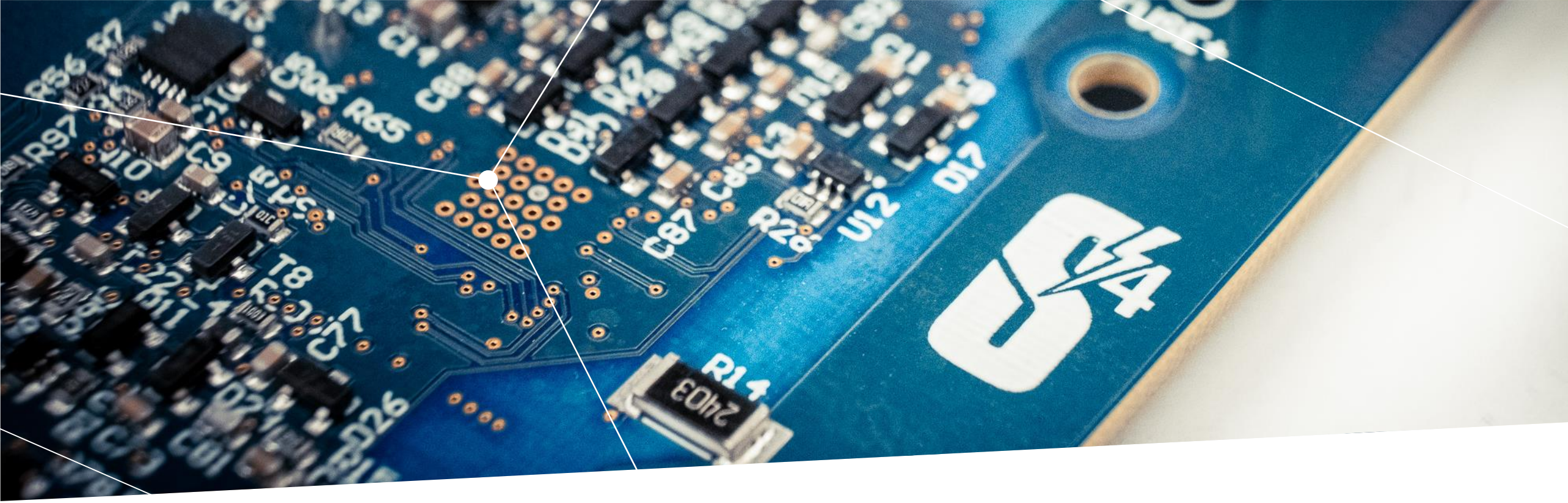

HV eFuse PoC – First steps

IFAT PSS EPIC HVC TM
08/2022

restricted

Driver installation

- Connect eFuse PoC PCB to PC
- Open device manager
- Double Click “Infineon WinUSB Device”
- Click “Update Drivers”
- “Choose Drivers to install”
- Point to XMC_WinUSBDriver folder

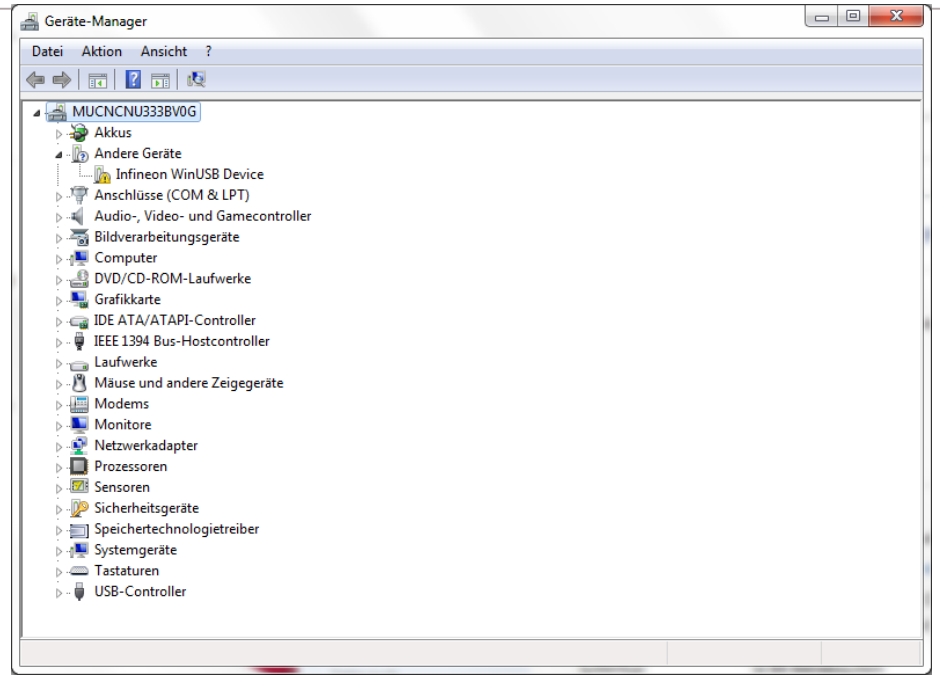

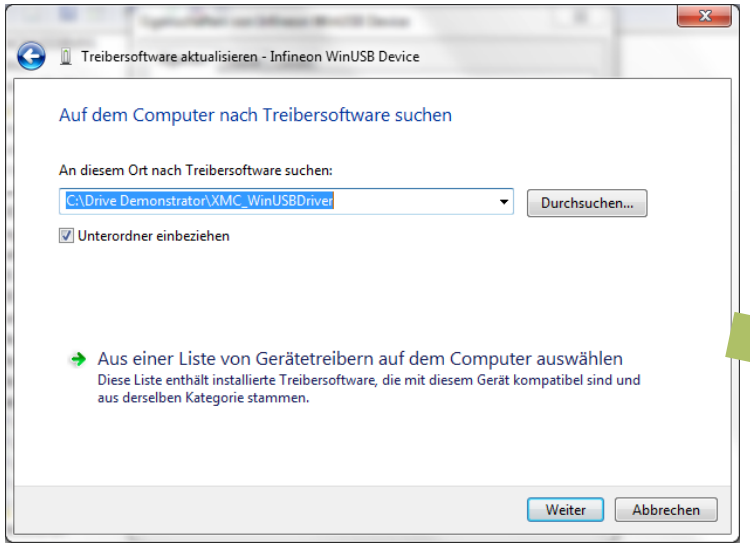

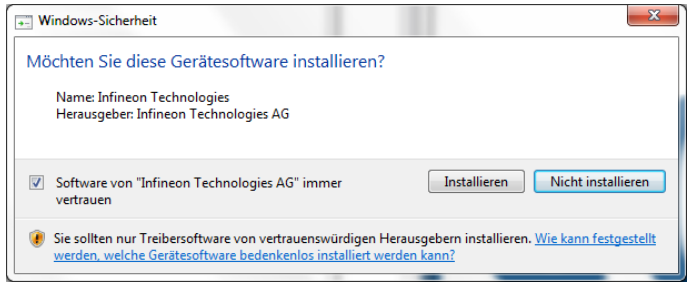

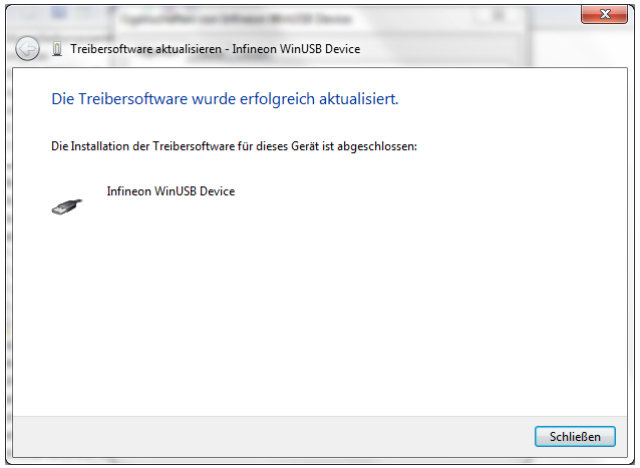

Copyright © Infineon Technologies AG 2022. All rights reserved.

Open GUI

- Open “eFuse PoC.exe” from “GUI” folder
- Select Infineon WinUSB Device
- Click Connect
- With “Start Readout” command – live data will be transmitted and displayed

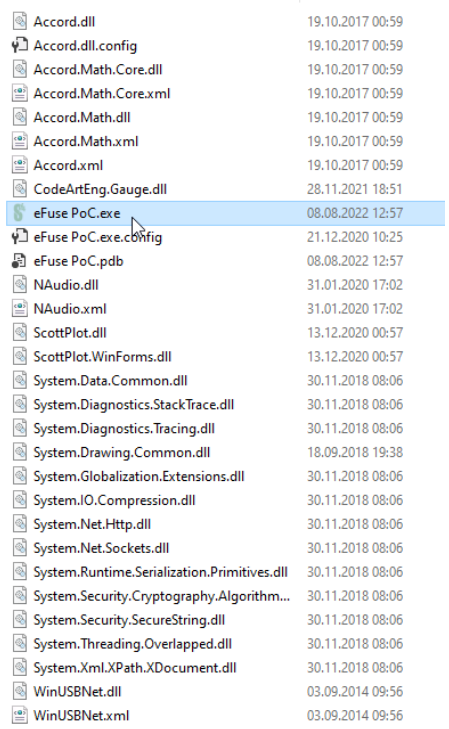

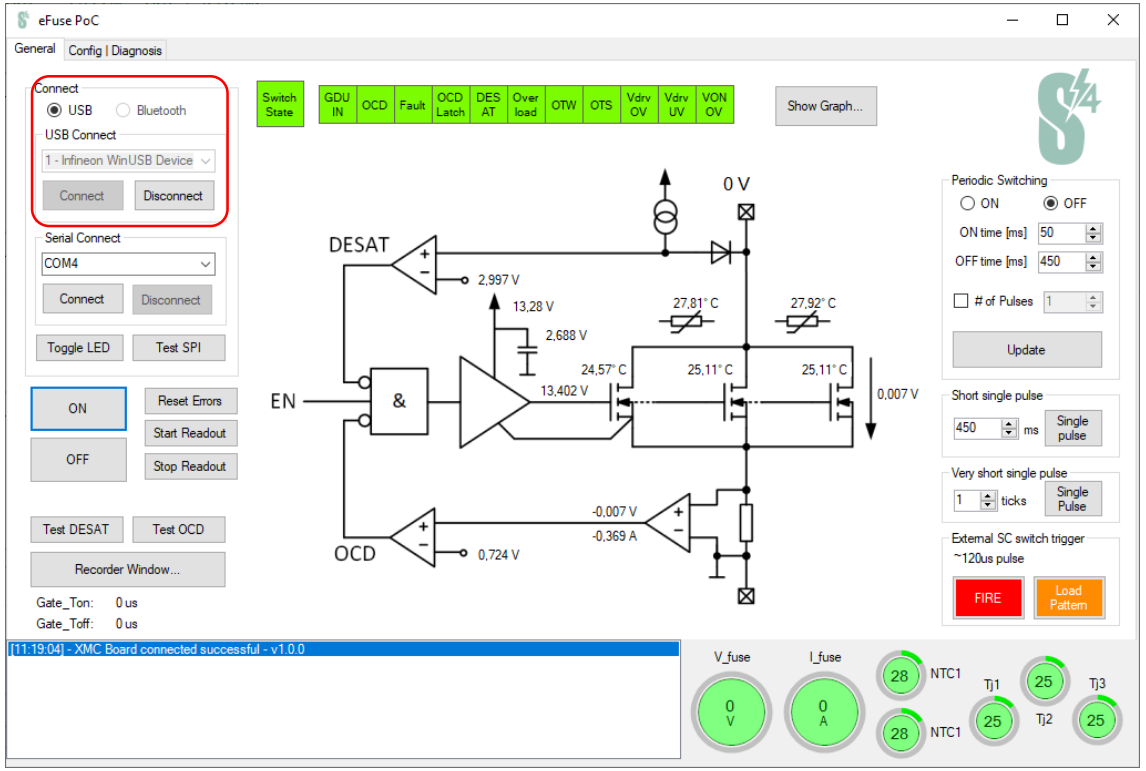

Copyright © Infineon Technologies AG 2022. All rights reserved.

GUI overview
Main

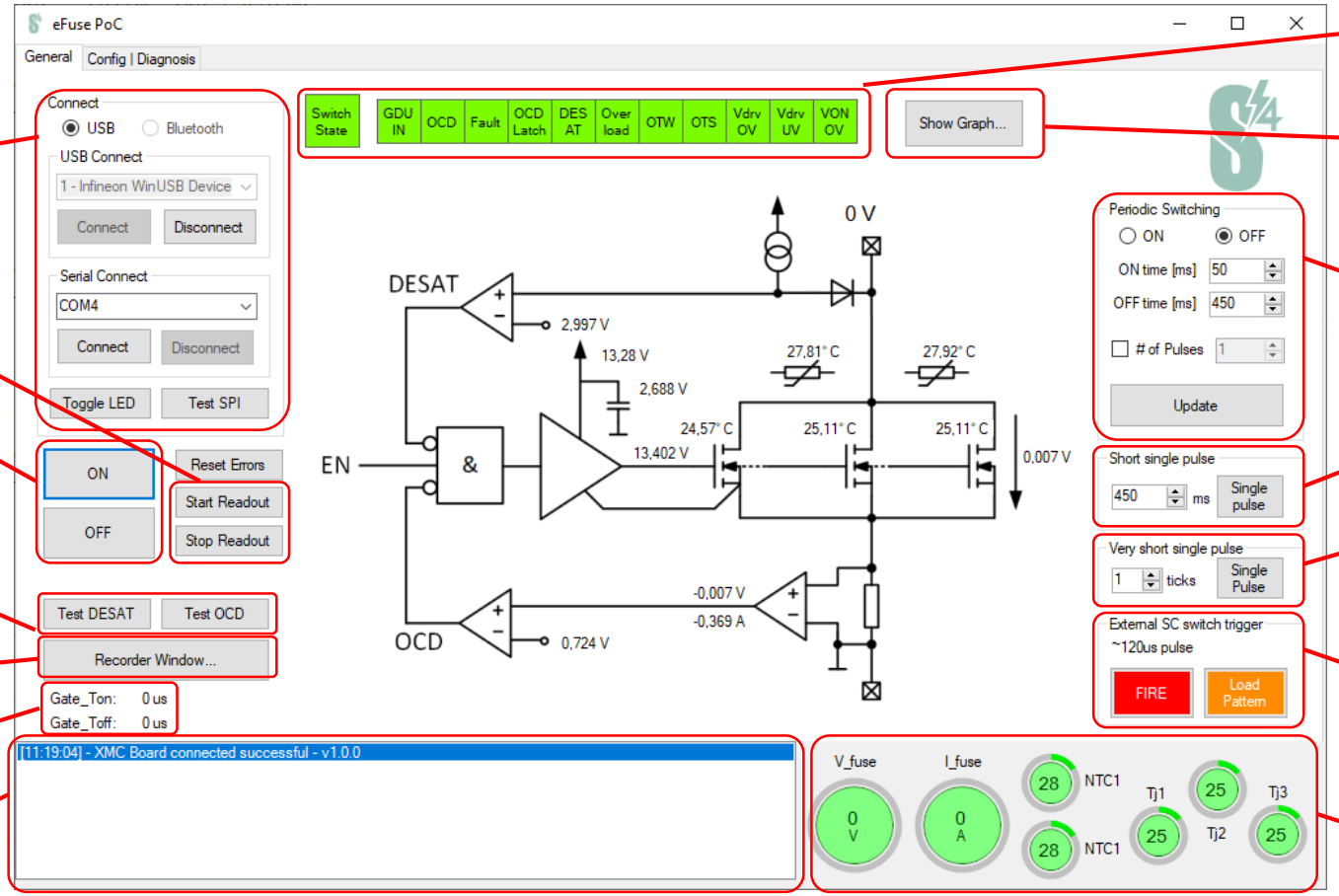

Connect to PoC

Start/Stop periodic status readout

SW control of fuse

Test OCD/DESAT function

High resolution data recorder

Gate turn-on/off times

Status messages

Error indicators

Open realtime chart window

Enable periodic switching

Short single pulse

Short single pulse
(µs range)

Enable system tests
(short circuit, load pattern)

Temperature monitoring

Copyright © Infineon Technologies AG 2022. All rights reserved.

GUI overview
Settings – configuration tab

Shunt/Gain configuration

Enable GDU high voltage mode (20V supply)

DESAT threshold

OCD threshold

SOH sub Vth voltage

Gate charge/ leakage test

SOH test

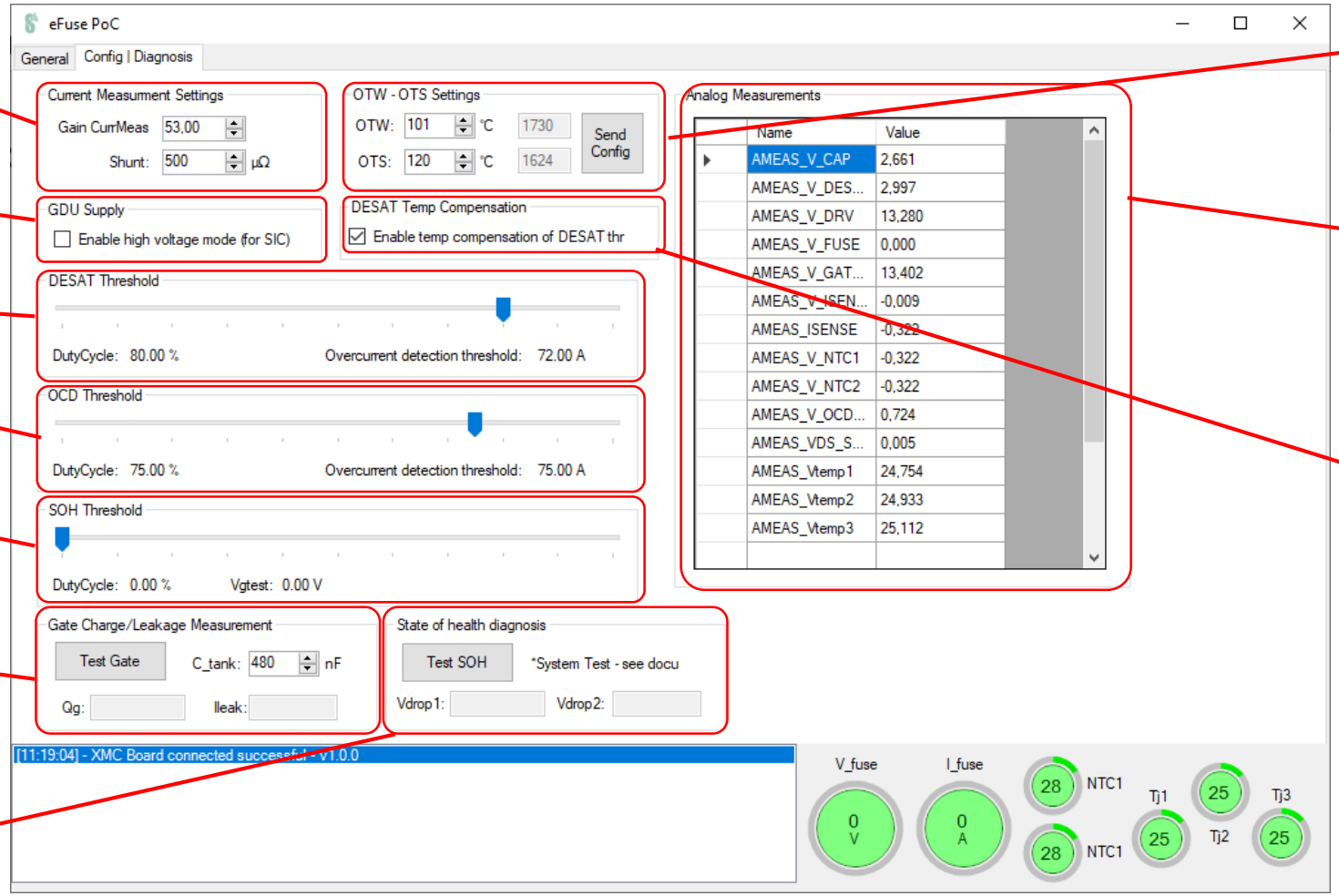

Overtemperature Shutdown and Warning Setting

Analog measurement

Enable temperature compensation for DESAT

Copyright © Infineon Technologies AG 2022. All rights reserved.

eFuse PoC
Typical Application Setup

› eFuse PoC used in low-side configuration

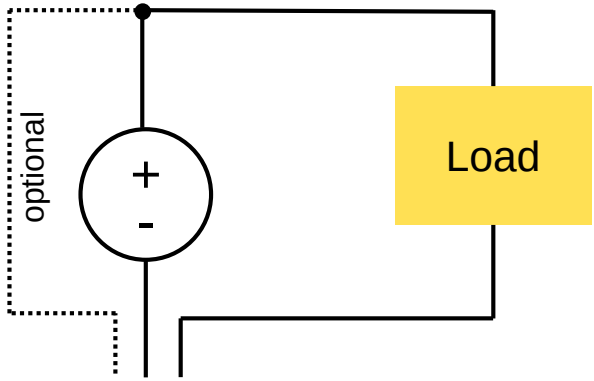

› Connect SELV interface board with PC
› Install WinUSB Driver for “Infineon WinUSB Device”
› Connect to device:

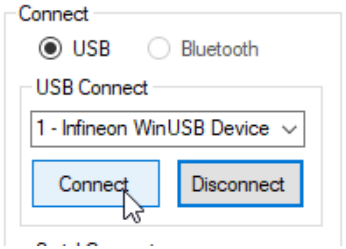



Communication & supply

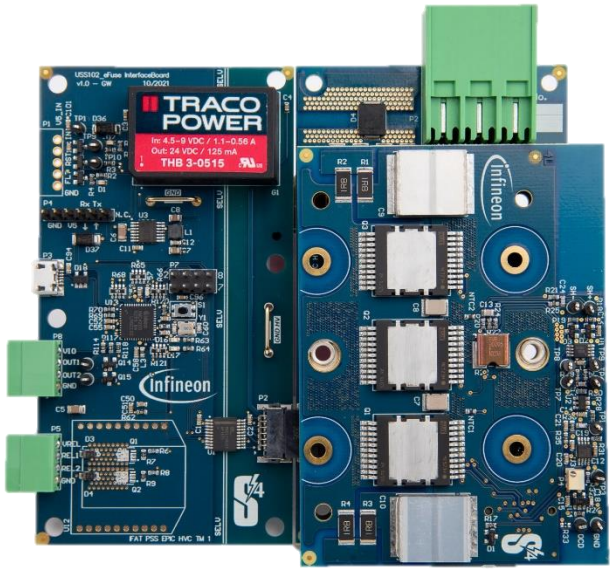

Copyright © Infineon Technologies AG 2022. All rights reserved.

Terminology for Solid State Switch Implementations

- Difference between eFuse and load switch:
  - **Load Switch:**
    - Repetitive engagement / disengagement events of loads
    - Inrush handling
    - Inductive clamping (nominal, short circuit events)
  - **eFuse:**
    - No inrush handling (engagement before main switch activation)
    - Disengagement action in case of external overload / short circuit

Dedicated solutions for different HV use cases

- eFuse PoC is intended to be used a safe turn-off device
- Inrush currents of capacitive loads could lead to trigger overcurrent detection

› eFuse PoC doesn’t allow a turn-on if voltage across switch is >10V

Copyright © Infineon Technologies AG 2022. All rights reserved.



Part of your life. Part of tomorrow.